Usage réservé
à 1 utilisateur

NF EN ISO 9239-1

FÉVRIER 2013

www.afnor.org

Ce document est à usage exclusif et non collectif des clients Normes en ligne.
Toute mise en réseau, reproduction et rediffusion, sous quelque forme que ce soit, même partielle, sont strictement interdites.

This document is intended for the exclusive and non collective use of AFNOR Webshop (Standards on line) customers. All network exploitation, reproduction and re-dissemination, even partial, whatever the form (hardcopy or other media), is strictly prohibited.

BOUTIQUE AFNOR

Nom : NOEL Dominique

Pour : AGENCE POUR LA RENOVATION DES SOLS

Client : 23641440

Commande : N20200122-439385-T

le : 22/01/2020 à 10:38

DOCUMENT PROTÉGÉ PAR LE DROIT D'AUTEUR

Droits de reproduction réservés. Sauf prescription différente, aucune partie de cette publication ne peut être reproduite ni utilisée sous quelque forme que ce soit et par aucun procédé, électronique ou mécanique, y compris la photocopie et les microfilms, sans accord formel.

Contacter :
AFNOR – Norm'Info
11, rue Francis de Pressensé
93571 La Plaine Saint-Denis Cedex
Tél : 01 41 62 76 44
Fax : 01 49 17 92 02
E-mail : norminfo@afnor.org

afnor

BOUTIQUE AFNOR - Usage réservé à 1 utilisateur (Siret : 75003675800050)
NOEL Dominique (dominique.noel@tecsom.com) Pour : AGENCE POUR LA RENOVATION DES SOLS

ISSN 0335-3931

French standard

NF EN ISO 9239-1
28 February 2013

Classification index: **P 92-523-1**

ICS: 13.220.50 ; 97.150

Reaction to fire tests for floorings — Part 1: Determination of the burning behaviour using a radiant heat source

F : Essais de réaction au feu des revêtements de sol — Partie 1 : Détermination du comportement au feu à l'aide d'une source de chaleur rayonnante
D : Prüfungen zum Brandverhalten von Bodenbelägen — Teil 1: Bestimmung des Brandverhaltens bei Beanspruchung mit einem Wärmestrahler

French standard approved

by decision of the Director General of AFNOR.

Replaces the approved standard NF EN ISO 9239-1 of March 2002.

Correspondence

The European standard EN ISO 9239-1:2010 has the status of French standard and reproduces in full the international standard ISO 9239-1:2010.

Summary

This document specifies a method for assessing the wind-opposed burning behaviour and spread of flame of horizontally mounted floorings exposed to a heat flux radiant gradient in a test chamber, when ignited with pilot flames.

Descriptors

Technical International Thesaurus: floor coverings, textile floor coverings, fire tests, determination, reaction to fire, flame propagation, procedure.

Modifications

With respect to the replaced document, revision of the standard.

Corrections

Published and distributed by Association Française de Normalisation (AFNOR — French standard institute) — 11, rue Francis de Pressensé — 93571 La Plaine Saint-Denis Cedex — Tel.: + 33 (0)1 41 62 80 00 — Fax: + 33 (0)1 49 17 90 00 — www.afnor.org

© AFNOR — All rights reserved
Version of 2013-02-P

BOUTIQUE AFNOR - Usage réservé à 1 utilisateur (Siret : 75003675800050) NF EN ISO 9239-1:2013-02
NOEL Dominique (dominique.noel@tecsom.com) Pour : AGENCE POUR LA RENOVATION DES SOLS

Standards

Standards are designed to serve as a basis in relations between economic, scientific, technical and social partners.

By nature, application of a standard is voluntary. When stipulated in a contract, it is binding on the parties. Legislation may require all or part of a standard to become compulsory.

The standard is a document defined by consensus within a standardisation body involving representatives of all stakeholders. It is submitted for public consultation prior to adoption.

The standard is regularly reviewed to assess its appropriateness over time.

Any standard is considered to be effective as from the date presented on the first page.

Understanding standards

The reader's attention is drawn to the following points:

Only the verbal form **shall** is used to express one or more requirements that shall be satisfied in order to comply with this document. Such requirements may be contained in the body of the standard or in a so-called '"normative" annex. For test methods, the use of the imperative corresponds to a requirement.

Expressions involving the verbal form **should** are used to express a possibility that, while preferred, is not actually necessary in order to comply with this document. The verbal form **may** is used to express practical, but not mandatory advice or suggestions, or permission.

Furthermore, this document may provide additional information aimed at making certain elements easier to understand or use, or at clarifying how such elements are applied, but without actually defining a requirement. These elements are presented as **notes or informative annexes**.

Standardisation commission

Acting within a given field of activity, a standardisation commission features the necessary expertise for preparing French standards and defining France's positions in European and international draft standards. The commission may also prepare experimental standards and technical reports.

If you would like to provide feedback on this document, make suggested changes or take part in the document's revision, write to "norminfo@afnor.org."

The composition of the standardisation commission that prepared this document is provided below. If experts are representing a body other than the body to which they habitually belong, this information is presented using the following convention: body of membership (body represented).

BOUTIQUE AFNOR - Usage réservé à 1 utilisateur (Siret : 75003675800050)
NOEL Dominique (dominique.noel@tecsom.com) Pour : AGENCE POUR LA RENOVATION DES SOLS

EUROPEAN STANDARD

NORME EUROPÉENNE

EUROPÄISCHE NORM

EN ISO 9239-1

June 2010

ICS 13.220.40; 59.080.60; 97.150

Supersedes EN ISO 9239-1:2002

English Version

Reaction to fire tests for floorings - Part 1: Determination of the burning behaviour using a radiant heat source (ISO 9239-1:2010)

Essais de réaction au feu des revêtements de sol - Partie 1: Détermination du comportement au feu à l'aide d'une source de chaleur rayonnante (ISO 9239-1:2010)

Prüfungen zum Brandverhalten von Bodenbelägen - Teil 1: Bestimmung des Brandverhaltens bei Beanspruchung mit einem Wärmestrahler (ISO 9239-1:2010)

This European Standard was approved by CEN on 19 May 2010.

CEN members are bound to comply with the CEN/CENELEC Internal Regulations which stipulate the conditions for giving this European Standard the status of a national standard without any alteration. Up-to-date lists and bibliographical references concerning such national standards may be obtained on application to the CEN Management Centre or to any CEN member.

This European Standard exists in three official versions (English, French, German). A version in any other language made by translation under the responsibility of a CEN member into its own language and notified to the CEN Management Centre has the same status as the official versions.

CEN members are the national standards bodies of Austria, Belgium, Bulgaria, Croatia, Cyprus, Czech Republic, Denmark, Estonia, Finland, France, Germany, Greece, Hungary, Iceland, Ireland, Italy, Latvia, Lithuania, Luxembourg, Malta, Netherlands, Norway, Poland, Portugal, Romania, Slovakia, Slovenia, Spain, Sweden, Switzerland and United Kingdom.

EUROPEAN COMMITTEE FOR STANDARDIZATION
COMITÉ EUROPÉEN DE NORMALISATION
EUROPÄISCHES KOMITEE FÜR NORMUNG

Management Centre: Avenue Marnix 17, B-1000 Brussels

© 2010 CEN All rights of exploitation in any form and by any means reserved worldwide for CEN national Members.

Ref. No. EN ISO 9239-1:2010: E

TIQUE AFNOR - Usage réservé à 1 utilisateur (Siret : 75003675800050)
Dominique (dominique.noel@tecsom.com) Pour : AGENCE POUR LA RENOVATION DES SOLS

Foreword

This document (EN ISO 9239-1:2010) has been prepared by Technical Committee ISO/TC 92 “Fire safety” in collaboration with Technical Committee CEN/TC 127 “Fire safety in buildings” the secretariat of which is held by BSI.

This European Standard shall be given the status of a national standard, either by publication of an identical text or by endorsement, at the latest by December 2010, and conflicting national standards shall be withdrawn at the latest by December 2010.

Attention is drawn to the possibility that some of the elements of this document may be the subject of patent rights. CEN [and/or CENELEC] shall not be held responsible for identifying any or all such patent rights.

This document supersedes EN ISO 9239-1:2002.

According to the CEN/CENELEC Internal Regulations, the national standards organizations of the following countries are bound to implement this European Standard: Austria, Belgium, Bulgaria, Croatia, Cyprus, Czech Republic, Denmark, Estonia, Finland, France, Germany, Greece, Hungary, Iceland, Ireland, Italy, Latvia, Lithuania, Luxembourg, Malta, Netherlands, Norway, Poland, Portugal, Romania, Slovakia, Slovenia, Spain, Sweden, Switzerland and the United Kingdom.

Endorsement notice

The text of ISO 9239-1:2010 has been approved by CEN as a EN ISO 9239-1:2010 without any modification.

BOUTIQUE AFNOR - Usage réservé à 1 utilisateur (Siret : 75003675800050)
NOEL Dominique (dominique.noel@tecsom.com) Pour : AGENCE POUR LA RENOVATION DES SOLS

Contents

Page

Foreword iv
Introduction v
1 Scope 1
2 Normative references 2
3 Terms and definitions 2
4 Principle 3
5 Apparatus 3
6 Test specimens 6
7 Conditioning 7
8 Test procedure 7
9 Expression of results 9
10 Test report 9
Annex A (normative) **Smoke measurement** 20
Annex B (informative) **Precision of test method** 23
Annex C (normative) **Gas and air supplies** 24
Bibliography 25

© ISO 2010 – All rights reserved

BOUTIQUE AFNOR - Usage réservé à 1 utilisateur (Siret : 75003675800050)
NOEL Dominique (dominique.noel@tecsom.com) Pour : AGENCE POUR LA RENOVATION DES SOLS

Foreword

ISO (the International Organization for Standardization) is a worldwide federation of national standards bodies (ISO member bodies). The work of preparing International Standards is normally carried out through ISO technical committees. Each member body interested in a subject for which a technical committee has been established has the right to be represented on that committee. International organizations, governmental and non-governmental, in liaison with ISO, also take part in the work. ISO collaborates closely with the International Electrotechnical Commission (IEC) on all matters of electrotechnical standardization.

International Standards are drafted in accordance with the rules given in the ISO/IEC Directives, Part 2.

The main task of technical committees is to prepare International Standards. Draft International Standards adopted by the technical committees are circulated to the member bodies for voting. Publication as an International Standard requires approval by at least 75 % of the member bodies casting a vote.

Attention is drawn to the possibility that some of the elements of this document may be the subject of patent rights. ISO shall not be held responsible for identifying any or all such patent rights.

ISO 9239-1 was prepared by Technical Committee ISO/TC 92, *Fire safety*, Subcommittee SC 1, *Fire initiation and growth*.

This third edition cancels and replaces the second edition (ISO 9239-1:2002) which has been technically revised.

ISO 9239 consists of the following parts, under the general title *Reaction to fire tests for floorings*:

— *Part 1: Determination of the burning behaviour using a radiant heat source*

— *Part 2: Determination of flame spread at a heat flux level of 25 kW/m^2*

© ISO 2010 – All rights reserved

BOUTIQUE AFNOR - Usage réservé à 1 utilisateur (Siret : 75003675800050)
NOEL Dominique (dominique.noel@tecsom.com) Pour : AGENCE POUR LA RENOVATION DES SOLS

Introduction

The measurements in the test method in this part of ISO 9239 provide a basis for estimating one aspect of fire exposure behaviour of floorings. The imposed radiant flux simulates the thermal radiation levels likely to impinge on the floor of a corridor whose upper surfaces are heated by flames or hot gases or both, during the early stages of a developing fire in an adjacent room or compartment under wind-opposed flame-spread conditions.

© ISO 2010 – All rights reserved

BOUTIQUE AFNOR - Usage réservé à 1 utilisateur (Siret : 75003675800050)
NOEL Dominique (dominique.noel@tecsom.com) Pour : AGENCE POUR LA RENOVATION DES SOLS

BOUTIQUE AFNOR - Usage réservé à 1 utilisateur (Siret : 75003675800050)
NOEL Dominique (dominique.noel@tecsom.com) Pour : AGENCE POUR LA RENOVATION DES SOLS

Reaction to fire tests for floorings —

Part 1:
Determination of the burning behaviour using a radiant heat source

WARNING — The possibility of a gas-air fuel explosion in the test chamber should be recognized. Suitable safeguards consistent with sound engineering practice should be installed in the panel fuel supply system. These should include at least the following:

— **a gas-feed cut-off which is immediately activated when air and/or gas supply fail;**

— **a temperature sensor or a flame detection unit directed at the panel surface that stops fuel flow when the panel flame goes out.**

The attention of all persons concerned with managing and carrying out this test is drawn to the fact that fire testing may be hazardous and that there is a possibility that toxic and/or harmful gases may be evolved during the test. Operational hazards may also arise during the testing of specimens, such as the possibility of an explosion, and during the disposal of test residues.

An assessment of all the potential hazards and risks to health should be made and safety precautions should be identified and provided. Written safety instructions should be issued. Appropriate training should be given to relevant personnel. Laboratory personnel should ensure that they follow written instructions at all times.

1 Scope

This part of ISO 9239 specifies a method for assessing the wind-opposed burning behaviour and spread of flame of horizontally mounted floorings exposed to a heat flux radiant gradient in a test chamber, when ignited with pilot flames. Annex A gives details of assessing the smoke development, when required.

This method is applicable to all types of flooring, e.g. textile carpet, cork, wood, rubber and plastics coverings as well as coatings. Results obtained by this method reflect the performance of the flooring, including any substrate if used. Modifications of the backing, bonding to a substrate, underlay or other changes of the flooring may affect test results.

This part of ISO 9239 is applicable to the measurement and description of the properties of floorings in response to heat and flame under controlled laboratory conditions. It should not be used alone to describe or appraise the fire hazard or fire risk of floorings under actual fire conditions.

Information on the precision of the test method is given in Annex B.

© ISO 2010 – All rights reserved

BOUTIQUE AFNOR - Usage réservé à 1 utilisateur (Siret : 75003675800050) NF EN ISO 9239-1:2013-02
NOEL Dominique (dominique.noel@tecsom.com) Pour : AGENCE POUR LA RENOVATION DES SOLS

2 Normative references

The following referenced documents are indispensable for the application of this document. For dated references, only the edition cited applies. For undated references, the latest edition of the referenced document (including any amendments) applies.

ISO 554, *Standard atmospheres for conditioning and/or testing — Specifications*

ISO 13943, *Fire safety — Vocabulary*

ISO 14697, *Reaction-to-fire tests — Guidance on the choice of substrates for building and transport products*

ISO 14934-3, *Fire tests — Calibration and use of heat flux meters — Part 3: Secondary calibration method*

EN 13238, *Reaction to fire tests for building products — Conditioning procedures and general rules for selection of substrates*

IEC 60584-1, *Thermocouples — Part 1: Reference tables*

3 Terms and definitions

For the purposes of this document, the terms and definitions given in ISO 13943 and the following apply.

3.1
heat flux
amount of thermal energy emitted, transmitted or received per unit area and unit time

NOTE Heat flux is expressed in kilowatts per square metre (kW/m^2).

3.2
critical heat flux at extinguishment
CHF
incident heat flux, in kW/m^2, at the surface of a specimen at the point where the flame ceases to advance and may subsequently go out

3.3
heat flux at X min
HF-X
heat flux, in kW/m^2, received by the specimen at the most distant spread of flame position observed during the first X min of the test

3.4
critical heat flux
heat flux at which the flame extinguishes (CHF) or the heat flux after the test period of 30 min (HF-30), whichever is the lower value (i.e. the flux corresponding to the furthest extent of spread of flame within 30 min)

3.5
heat flux profile
curve relating the heat flux on the specimen plane to the distance from the zero point

3.6
zero point of heat flux profile
inner edge of the hottest side of the specimen holder

3.7
sustained flaming
persistence of flame on or over the surface of the specimen for a period of more than 4 s

 © ISO 2010 – All rights reserved

3.8
flame-spread distance
furthest extent of travel of a sustained flaming along the length of the test specimen within a given time

3.9
flooring
upper layer(s) of a floor, comprising any surface finish with or without an attached backing and with any accompanying underlay, interlay and/or adhesive

3.10
substrate
product which is used immediately beneath the product about which information is required

NOTE For a flooring, it is the floor on which the flooring is mounted or the material representing the floor.

3.11
tiles
generally square flooring with linear dimensions of up to 500 mm

4 Principle

The test specimen is placed in a horizontal position below a gas-fired radiant panel inclined at 30° where it is exposed to a defined heat flux. A pilot flame is applied to the hotter end of the specimen. The test principle is illustrated in Figure 1. Following ignition, any flame front which develops is noted and a record is made of the progression of the flame front horizontally along the length of the specimen in terms of the time it takes to spread to defined distances. If required, the smoke development during the test is recorded as the light transmission in the exhaust stack.

The results are expressed in terms of flame-spread distance versus time, the critical heat flux at extinguishment and smoke density versus time.

5 Apparatus

5.1 General

The apparatus shall be as described in 5.2 to 5.8 and shall have the dimensions shown in Figures 2 to 5. The apparatus shall be placed in a room that is sufficiently large that there is a distance of at least 0,4 m between the apparatus and the walls and the ceiling.

5.2 Test chamber

The chamber shall be made of calcium silicate boards of (13 ± 1) mm thickness and 650 kg/m^3 to 750 kg/m^3 nominal density, with a tightly fitting panel of fire-resistant glass with dimensions of (110 ± 10) mm × (1 100 ± 100) mm, situated at the front so that the whole length of the specimen can be observed during the test. The chamber may have an outside metal cladding. Below this observation window, an access door shall be provided through which the test specimen platform can be moved into the chamber for the test and out of the chamber after test.

5.3 Specimen holder

The test specimen holder is fabricated from heat-resistant L-profile stainless steel of (2,0 ± 0,1) mm thickness with the dimensions shown in Figure 6. The test specimen is exposed through an opening (200 ± 3) mm × (1 015 ± 10) mm. The test specimen holder is fastened to the sliding steel platform by means of two bolts on each end.

© ISO 2010 – All rights reserved

BOUTIQUE AFNOR - Usage réservé à 1 utilisateur (Siret : 75003675800050) NF EN ISO 9239-1:2013-02
NOEL Dominique (dominique.noel@tecsom.com) Pour : AGENCE POUR LA RENOVATION DES SOLS

The test specimen holder shall be provided with a means to secure the specimen (e.g. steel bar clamps); a maximum of eight clamps shall be used. The overall thickness of the holder is (22 ± 2) mm.

5.4 Sliding platform

The bottom of the chamber shall consist of a sliding platform which shall have provision for rigidly securing the test specimen holder in a fixed and level position (see Figure 1). The total air access area between the chamber and the test specimen holder shall be (0,23 ± 0,03) m^2 uniformly distributed on all sides of the test specimen.

5.5 Steel scale

At least one steel scale marked with 10 mm and 50 mm intervals has to be mounted on one side of the test specimen holder. A second steel scale on the other side of the specimen holder may also be used.

5.6 Gas-fired radiant panel

The source of radiant heat energy shall be a panel of porous refractory material mounted in a metal frame, with a radiation surface of (300 ± 10) mm × (450 ± 10) mm.

The panel shall be capable of withstanding temperatures up to 900 °C and use a fuel gas/air mixing system[1)] with suitable instrumentation (see Annex C) to ensure consistent and repeatable operation.

The radiant heat panel is placed over the test specimen holder with its longer dimension at (30 ± 1)° to the horizontal plane (see Figure 5).

5.7 Pilot burner

The pilot burner, used to ignite the test specimen, shall be of nominal internal diameter 6 mm and of outer diameter 10 mm, and be made of stainless steel having two lines of 19 evenly spaced 0,7 mm diameter holes drilled radially along the centre-line and 16 evenly spaced 0,7 mm diameter holes drilled radially 60° below the centre-line (see Figure 7). In operation, the propane flow rate shall be adjusted to (0,026 ± 0,002) l/s. The pilot burner shall be positioned so that the flames generated from the lower line of holes will impinge on the specimen (10 ± 2) mm from the zero point (see Figure 8). The pilot burner tube shall be 3 mm above the edge of the specimen holder when the burner is in the ignition position. When not being applied to the test specimen, the burner shall be capable of being moved at least 50 mm away from the zero point of the test specimen. The gas used shall be commercial-grade propane having a calorific value of approximately 83 MJ/m^3.

NOTE 1 It is important to keep the holes in the pilot burner clean. A soft wire brush is suitable to remove surface contaminants. Nickel-chromium or stainless-steel wire, 0,5 mm in diameter, is suitable for opening the holes.

NOTE 2 With the propane gas flow properly adjusted and the pilot burner in the test position, the pilot flame will vary in height from approximately 60 mm to approximately 120 mm across the width of the burner (see Figure 8).

5.8 Exhaust system

An exhaust system[2)], connected to the exhaust duct and de-coupled from the exhaust stack of the test apparatus, shall be used to extract the products of combustion. With the gas-fired radiant panel turned off, the dummy specimen in place and the access door closed, the air velocity in the exhaust stack shall be (2,5 ± 0,2) m/s.

---

1) Propane and/or butane/air mixtures have been proven to be suitable, but other fuel gas/air mixtures may also be used.

2) An exhaust capacity of 39 m^3/min to 85 m^3/min (at 25 °C, 1 bar) has proved to be suitable.

 © ISO 2010 – All rights reserved

5.9 Anemometer

An anemometer with an accuracy of ± 0,1 m/s shall be provided for measuring the air velocity in the exhaust stack. It shall be fitted in the exhaust stack, in such a way that its measuring point coincides with the centre-line of the exhaust stack at (250 ± 10) mm above the lower edge of the exhaust stack (see Figure 4).

5.10 Radiation pyrometer

In order to control the thermal output of the radiant panel, a radiation pyrometer with a range of 480 °C to 530 °C (black-body temperature) and an accuracy of ±5 °C suitable for viewing a circular area 250 mm in diameter at a distance of about 1,4 m shall be used.

The sensitivity of the pyrometer shall be substantially constant between the wavelengths 1 µm and 9 µm.

5.11 Thermocouples

A 3,2 mm stainless-steel sheathed type K thermocouple, in accordance with IEC 60584-1 with an insulated measuring junction, shall be mounted in the flooring radiant test chamber. It shall be located in the longitudinal central vertical plane of the chamber, 25 mm down from the top and 100 mm back from the inside wall of the exhaust stack (see Figures 4 and 5).

A second thermocouple may be inserted centrally in the exhaust stack, at a distance of (150 ± 2) mm from the top of the exhaust stack. The thermocouples shall be cleaned after each test.

5.12 Heat flux meter

The heat flux meter used to determine the heat flux profile to the test specimen shall be of the Schmidt-Boelter type without a window and with a diameter of 25 mm. Its range shall be from 0 kW/m^2 to 15 kW/m^2, and shall be calibrated over the operating heat flux level range from 1 kW/m^2 to 15 kW/m^2. A source of cooling water with a temperature of 15 °C to 25 °C shall be provided for this instrument.

The heat flux meter shall have an accuracy of ±3 % of the measured value, and shall be calibrated in accordance with ISO 14934-3.

5.13 Dummy specimen

The dummy specimen used for calibration shall be made of (20 ± 1) mm thick uncoated calcium silicate board of (850 ± 100) kg/m^3 density. It shall be (250 ± 10) mm wide and (1 050 ± 20) mm long (see Figure 6), with (26 ± 1) mm diameter holes centred on and along the centre-line at 110 mm, 210 mm through to 910 mm locations, measured from the zero point of the test specimen.

5.14 Recording equipment

Recording equipment shall be suitable for recording the output from the radiation pyrometer and the heat flux meter.

5.15 Timing device

A timing device capable of recording elapsed time to the nearest second and with an accuracy of 1 s in 1 h shall be used.

5.16 Smoke measurements

The apparatus described in Annex A shall be used if smoke measurements are required.

© ISO 2010 – All rights reserved

6 Test specimens

The test specimens shall be representative of the flooring in its end use.

6.1 Number

Cut six specimens with dimensions (1 050 ± 5) mm × (230 ± 5) mm, three in one direction (e.g. production direction) and three in a direction perpendicular to the first direction.

6.2 Substrates

The specimen shall be mounted on a substrate that simulates the actual floor (see EN 13238 or ISO 14697) and shall simulate actual installation practice.

6.3 Adhesives

The adhesive used for the specimens shall be representative of those used in practice. If in practice different adhesives are used, the specimens shall be prepared using each of the different adhesives or without adhesives.

6.4 Underlay

When used as part of the specimen, underlays shall be representative of those used in practice.

6.5 Tiles

If the specimen consists of tiles, it shall be mounted in such a way that at least one joint is situated 250 mm from the zero point.

Where the tile is not sufficiently wide to cover the width of the specimen holder, the test specimen shall be prepared to incorporate a centre-longitudinal joint.

6.6 Loose laid flooring

Loose laid flooring including tiles, when tested without adhesives, shall be fixed only by means of the specimen holder and its clamps (see 5.3).

Flooring, which due to shrinkage withdraws from the specimen holder frame, can show different results depending on the fixing. Special attention shall therefore be given to the use of good fixing techniques for floorings with a tendency to shrink during the heat exposure.

6.7 Washing and cleaning

To determine the effect of washing or cleaning procedures on the fire performance of the flooring, the test specimens shall be washed or cleaned in accordance with the procedures given in the relevant product specification for the flooring.

6.8 Formal test

A formal test shall consist of the results from three specimens which are identical in all respects.

Additional details for the preparation of the test specimen shall be in accordance with the relevant product specifications.

 © ISO 2010 – All rights reserved

For loose fill materials and for materials that melt forming molten pools, ensure that the sides of the specimen holder are fully closed. No attempt should be made to increase the height of the specimen holder to adjust the incident heat flux on the specimen.

7 Conditioning

The specimens shall be conditioned as specified in EN 13238 or ISO 554.

The curing time for flooring, which is glued to the substrate, is at least three days. This time may be part of the conditioning.

8 Test procedure

8.1 Calibration procedure

8.1.1 The apparatus shall be calibrated using the following procedure after each essential change of the apparatus, or at least once a month. If there are no changes in subsequent calibrations, this interval may be extended to six months.

8.1.2 Position the sliding platform and the mounting frame together with the dummy specimen in the chamber. Measure the air-flow rate in the exhaust stack with the exhaust system running and the access door closed and, if necessary, adjust it to (2,5 ± 0,2) m/s. Ignite the radiant panel.

Allow the unit to heat for at least 1 h until the chamber temperature has stabilized (see 8.2.2). The pilot burner shall be off during this period.

8.1.3 Measure the heat flux level at the 410 mm point with the total heat flux meter. Insert the heat flux meter in the hole so that its detecting surface is between 2 mm and 3 mm above and parallel to the plane of the dummy specimen. Allow the reading to stabilize over a 30 s period. Read its output over a subsequent 30 s. If the averaged level is (5,1 ± 0,2) kW/m^2, start the heat flux profile determination. If it is not, make the necessary adjustments to the gas/air flows to the panel, and the in-panel fuel flow, at least 10 min before a new reading of the heat flux is taken.

8.1.4 Perform the determination of the heat flux profile.

Insert the heat flux meter in each hole in turn, starting with the 110 mm location and ending with the 910 mm location. Ensure that the detecting plane of the meter and time of measurement agree with 8.1.3. To determine whether the heat flux level has changed during these measurements, check the reading at 410 mm, after the 910 mm reading.

8.1.5 Record the heat flux data as a function of distance along the specimen plane. Carefully draw a smooth curve through the data points. This curve is the heat flux profile curve (see Figure 9). The heat flux value reported and used as a basis for determining the CHF is based on interpolations of this curve.

If the heat flux profile curve is within the tolerances of Table 1, the test equipment is in calibration and the heat flux profile determination is completed. If not, carefully adjust the fuel flow and allow at least 10 min to ensure that the chamber temperature is stabilized. Repeat the procedure until the heat flux profile is within the specifications in Table 1.

NOTE To correct the heat flux at the hotter end of the specimen, normally only a change of gas flow is necessary. To correct the heat flux at the colder end of the specimen, a change to both gas and air flows can be necessary.

8.1.6 Remove the dummy specimen and close the door. After 5 min, measure the black-body temperature of the radiant panel and the temperature of the chamber. Record the results.

© ISO 2010 – All rights reserved

BOUTIQUE AFNOR - Usage réservé à 1 utilisateur (Siret : 75003675800050) NF EN ISO 9239-1:2013-02
NOEL Dominique (dominique.noel@tecsom.com) Pour : AGENCE POUR LA RENOVATION DES SOLS

Table 1 — Required heat flux distribution onto the dummy specimen board

Distance to zero point of specimen mm	Heat flux kW/m^2	Tolerances kW/m^2
110	10,9	±0,4
210	9,2	±0,4
310	7,1	±0,4
410	5,1	±0,2
510	3,5	±0,2
610	2,5	±0,2
710	1,8	±0,2
810	1,4	±0,2
910	1,1	±0,2

8.2 Standard test procedure

8.2.1 Set the air flow in the exhaust stack in accordance with 8.1.2. Remove the dummy specimen and close the door. Ignite the panel and allow the test apparatus to heat for at least 1 h until the chamber temperature has stabilized.

8.2.2 Measure the black-body temperature of the radiant panel. The black-body temperature shall be within ± 5 °C of the black-body temperature recorded during the calibration in accordance with 8.1.6. The chamber temperature shall be within ± 10 °C of the chamber temperature recorded during the calibration in accordance with 8.1.6.

If the black-body or chamber temperature differs by more than the given limits, adjust the gas/air input to the radiant panel. Allow the test apparatus unit to stabilize for at least 15 min before the temperatures are measured again. When the temperatures are within the limits given, the test apparatus is ready for use.

If required, adjust the smoke-measuring system so that its output value is equal to 100 %. Ensure that the measuring system has stabilized before starting the tests. If not, adjust it further. Check the purging air to both the lamp and the detector system and adjust if necessary.

8.2.3 Insert the test specimen, including any underlay(s) and substrate, into the specimen holder. Place the steel bar clamps across the back of the assembly and tighten the nuts firmly or apply other fixing means. Raise the pile of textile flooring, if applicable, using a vacuum cleaner and mount the test specimen and its holder onto the sliding platform.

Ignite the pilot burner, keeping it at least 50 mm away from the intended zero point of the test specimen. Move the sliding platform into the chamber and immediately close the door. This is the start of the test. Start the timing and recording devices.

After preheating for 2 min with the pilot burner at least 50 mm away from the zero point of the test specimen, bring the pilot burner flames into contact with the test specimen 10 mm from the edge of the holder as specified in 5.5. Leave the pilot burner flames in contact with the test specimen for 10 min, then withdraw the pilot burner to a position at least 50 mm away from the zero point of the test specimen. Extinguish the pilot burner flames. During the test, both the gas and air flow to the radiant panel shall be kept constant.

 © ISO 2010 – All rights reserved

8.2.4 At 10 min intervals from the start of the test and at the flame-out time, measure the distances between the flame front and the zero point to the nearest 10 mm. Observe and record any significant phenomena such as transitory flaming, melting, blistering, time and location of glowing combustion after flame-out, penetration of the flame through to the substrate, etc.

Additionally, note the times when the flames reach each 50 mm mark and the most distant point reached at any time during the test, measured to the nearest 10 mm.

The test shall be terminated after 30 min, unless the sponsor requires a longer test duration.

8.2.5 If required, smoke measurements shall be carried out as described in Annex A.

8.2.6 Carry out the test on each of two specimens, one of which has been cut in one direction and the other of which has been cut in the direction perpendicular to the first, in accordance with 6.1. Note which of the two specimens yields the lower CHF and/or HF-30 value(s), calculated in accordance with Clause 9. Repeat the test on the two further specimens that have been cut in that direction (see 6.1).

8.2.7 Do not begin the next test until the black-body temperature and the chamber temperature are as specified in 8.2.2. The specimen holder shall be at room temperature prior to mounting a new test specimen.

9 Expression of results

9.1 From the heat flux profile curve plotted in accordance with 8.1.5, convert the observed distances of flame spread to kilowatts per square metre and determine the critical heat flux. Read to the nearest 0,2 kW/m^2. Specimens that do not ignite or which spread flame less than 110 mm have a critical heat flux of $\geqslant$ 11 kW/m^2. Test specimens with flame-spread distances longer than 910 mm have a critical heat flux $\leqslant$ 1,1 kW/m^2. The specimens which are extinguished by the operator at 30 min do not have a CHF value, but only a HF-30 value.

9.2 Report the results from the four tests (see 8.2.6) in terms of CHF and/or HF-30 values with the appropriate directional description. Calculate the mean value for the critical flux (CHF and/or HF-30) from the three specimens from the same orientation.

9.3 For test durations longer than 30 min, record the time of flame extinguishment and the most distant point of flame spread and convert this to CHF.

9.4 Report the time at which the flames reach each 50 mm mark and record the flame-spread distance at each 10 min interval as described in 8.2.4, in order to determine the HF-X value as required, e.g. HF-10, HF-20, HF-30. Also record the extinguishing time and the final maximum flame-spread distance.

9.5 If required, report the results of the smoke measurement in accordance with A.6.

10 Test report

The test report shall include at least the following information. A clear distinction shall be made between the data provided by the sponsor and data determined by the laboratory.

a) a reference stating that the test was carried out in accordance with this part of ISO 9239 (ISO 9239-1:2010);

b) any deviations from the test method;

c) name and address of the testing laboratory;

d) date and identification number of the report;

e) name and address of the sponsor;

© ISO 2010 – All rights reserved

BOUTIQUE AFNOR - Usage réservé à 1 utilisateur (Siret : 75003675800050)
NOEL Dominique (dominique.noel@tecsom.com) Pour : AGENCE POUR LA RENOVATION DES SOLS

f) name and address of the manufacturer/supplier, if known;

g) date of sample arrival;

h) identification of the product;

i) description of the sampling procedure, where relevant;

j) a general description of the product tested, including density, mass per unit area and thickness, together with the form of construction of the test specimen;

k) details of conditioning;

l) date of test;

m) test results expressed in accordance with Clause 9;

n) observations made during the test;

o) the statement: “The test results relate to the behaviour of the test specimens of a product under the particular conditions of the test; they are not intended to be the sole criterion for assessing the potential fire hazard of the product in use.”

© ISO 2010 – All rights reserved

BOUTIQUE AFNOR - Usage réservé à 1 utilisateur (Siret : 75003675800050)
NOEL Dominique (dominique.noel@tecsom.com) Pour : AGENCE POUR LA RENOVATION DES SOLS

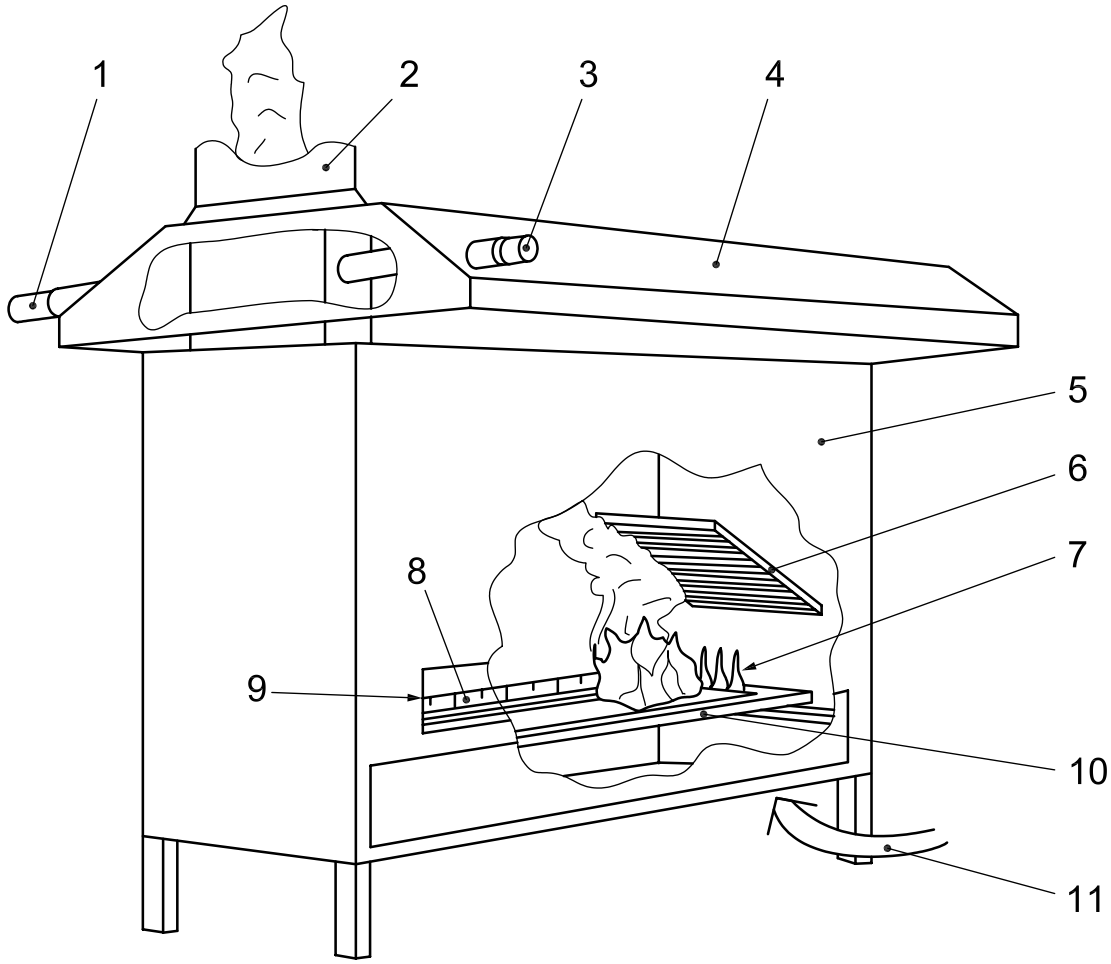

Key

1	lamp	7	pilot flames from line burner
2	exhaust duct	8	scale
3	detector	9	observation window
4	exhaust hood	10	specimen holder with specimen together on sliding platform
5	test chamber	11	air inlet all around specimen at bottom of chamber
6	gas-fired radiant panel		

Figure 1 — Perspective view showing test principle

© ISO 2010 – All rights reserved

BOUTIQUE AFNOR - Usage réservé à 1 utilisateur (Siret : 75003675800050) NF EN ISO 9239-1:2013-02
NOEL Dominique (dominique.noel@tecsom.com) Pour : AGENCE POUR LA RENOVATION DES SOLS

Dimensions in millimetres

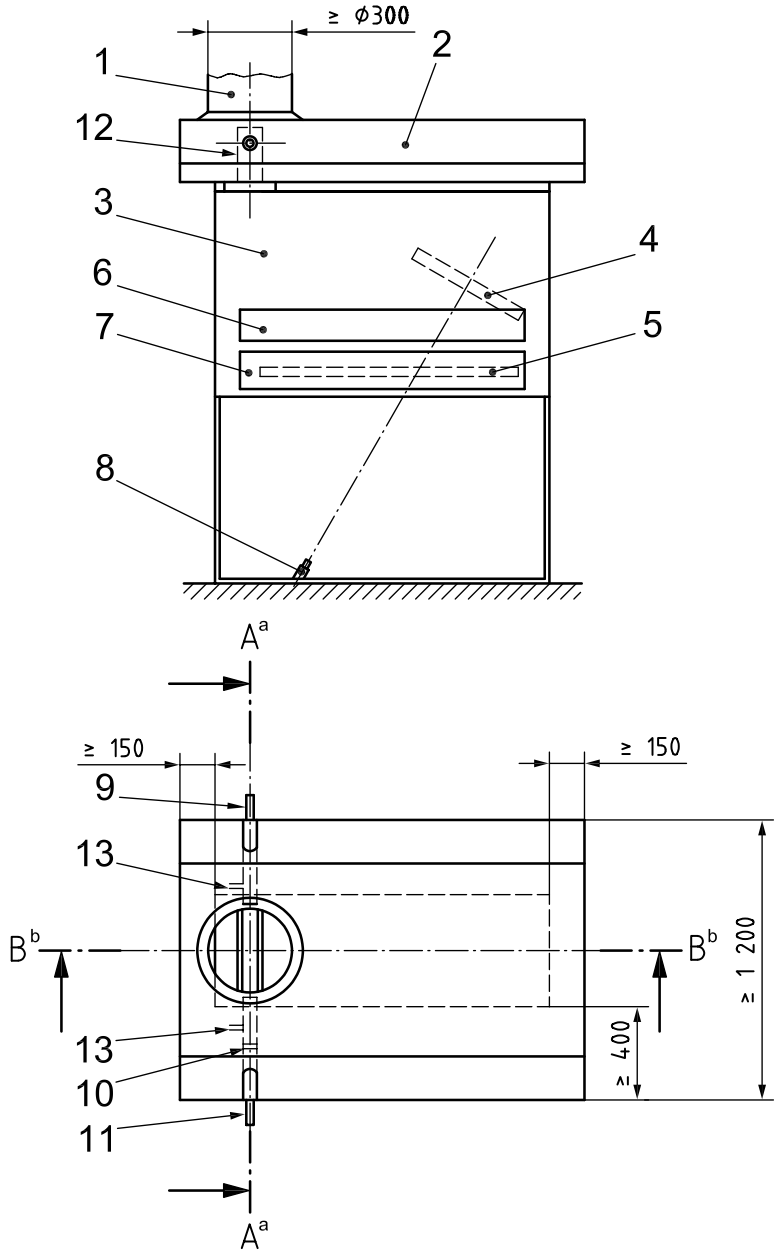

Key

1 exhaust duct
2 exhaust hood
3 test chamber
4 gas-fired radiant panel
5 specimen holder with specimen
6 observation window
7 door for insertion and removal of specimen
8 pyrometer
9 lamp
10 slot for calibration filters
11 detector
12 exhaust stack
13 tubes for purging air supply
[a] Section A-A: see Figure 4.
[b] Section B-B: see Figure 5.

Figure 2 — Side view B-B and plan of test equipment

© ISO 2010 – All rights reserved

BOUTIQUE AFNOR - Usage réservé à 1 utilisateur (Siret : 75003675800050)
NOEL Dominique (dominique.noel@tecsom.com) Pour : AGENCE POUR LA RENOVATION DES SOLS

Dimensions in millimetres

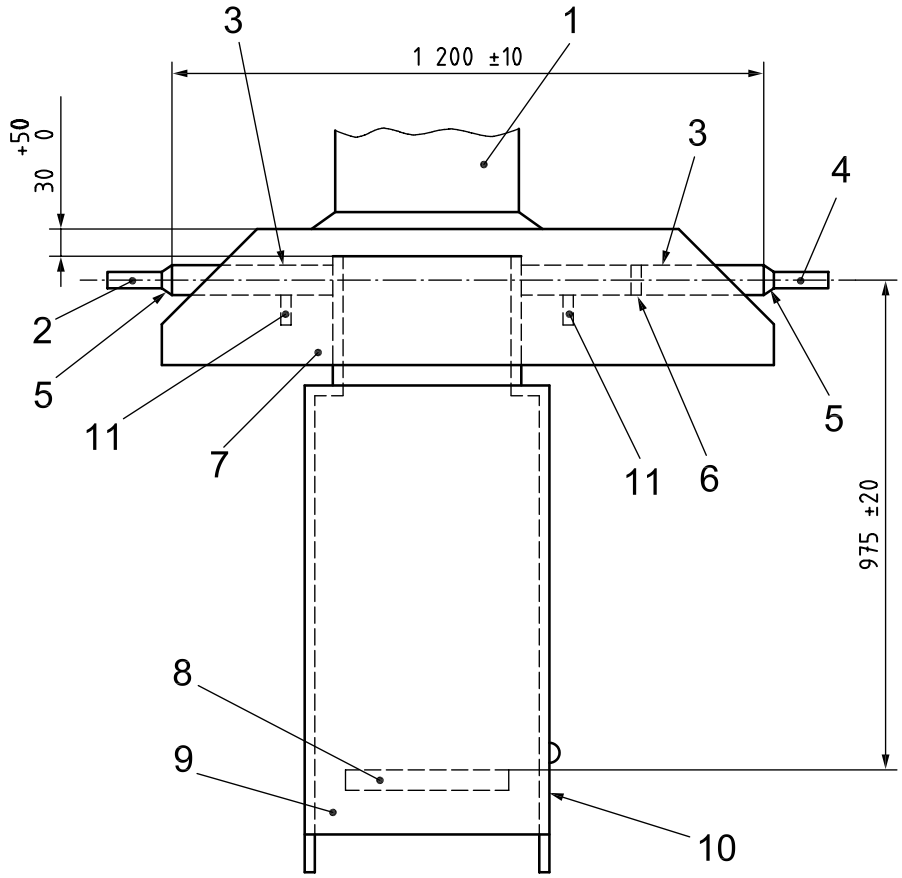

Key

1 exhaust duct
2 lamp
3 steel tubes for light-measuring system
4 detector
5 collar or rubber rings
6 slot for calibration filters
7 exhaust hood
8 specimen holder with specimen
9 test chamber
10 door for insertion and removal of specimen
11 tubes for purging air supply

Figure 3 — End view A-A of test equipment (see Figure 2)

© ISO 2010 – All rights reserved

BOUTIQUE AFNOR - Usage réservé à 1 utilisateur (Siret : 75003675800050) NF EN ISO 9239-1:2013-02
NOEL Dominique (dominique.noel@tecsom.com) Pour : AGENCE POUR LA RENOVATION DES SOLS

Dimensions in millimetres

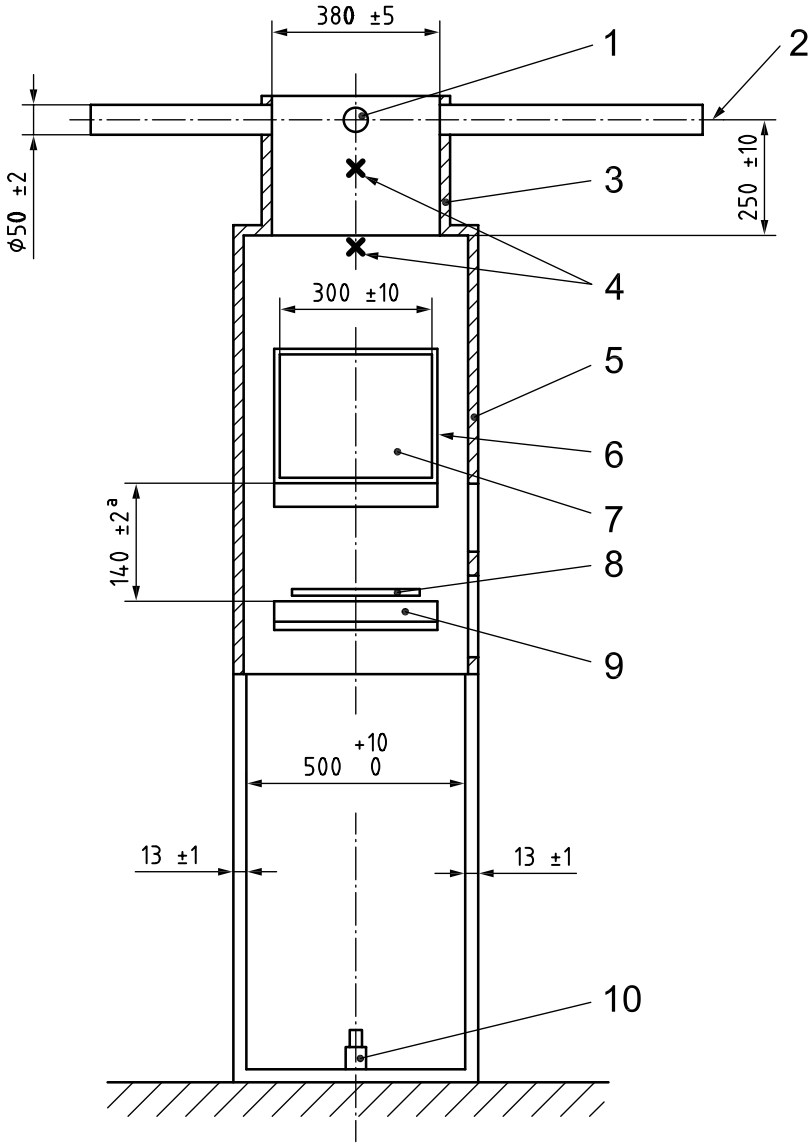

Key

1 position for anemometer
2 light-measuring beam
3 exhaust stack
4 thermocouples
5 test chamber
6 gas-fired radiant panel
7 radiating surface
8 pilot burner
9 specimen holder with specimen
10 pyrometer

[a] Dimension measured from the exposed surface of the specimen to the bottom edge of the radiating panel.

Figure 4 — Section A-A of test equipment

 © ISO 2010 – All rights reserved

Dimensions in millimetres

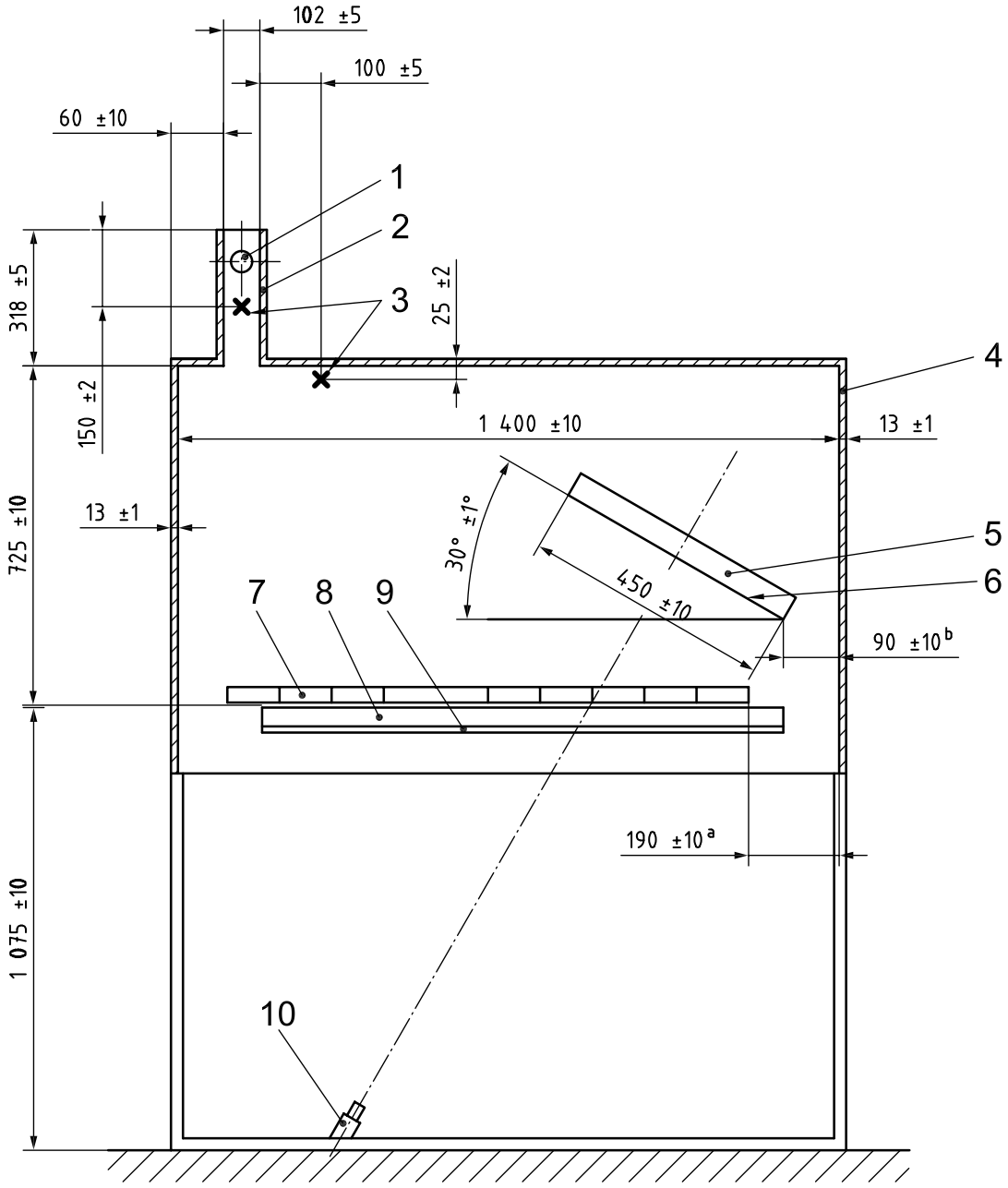

Key

1	opening for light-measuring system	6	radiating surface
2	exhaust stack	7	scale
3	thermocouples	8	specimen holder with specimen
4	test chamber	9	specimen transport system
5	gas-fired radiant panel	10	pyrometer

[a] Dimension measured from the zero point (the inner edge of the specimen holder) to the inner surface of the chamber wall.

[b] Dimension measured from the bottom edge of the radiating panel to the inner surface of the chamber wall.

Figure 5 — Section B-B of test equipment

© ISO 2010 – All rights reserved

BOUTIQUE AFNOR - Usage réservé à 1 utilisateur (Siret : 75003675800050)
NOEL Dominique (dominique.noel@tecsom.com) Pour : AGENCE POUR LA RENOVATION DES SOLS

Dimensions in millimetres

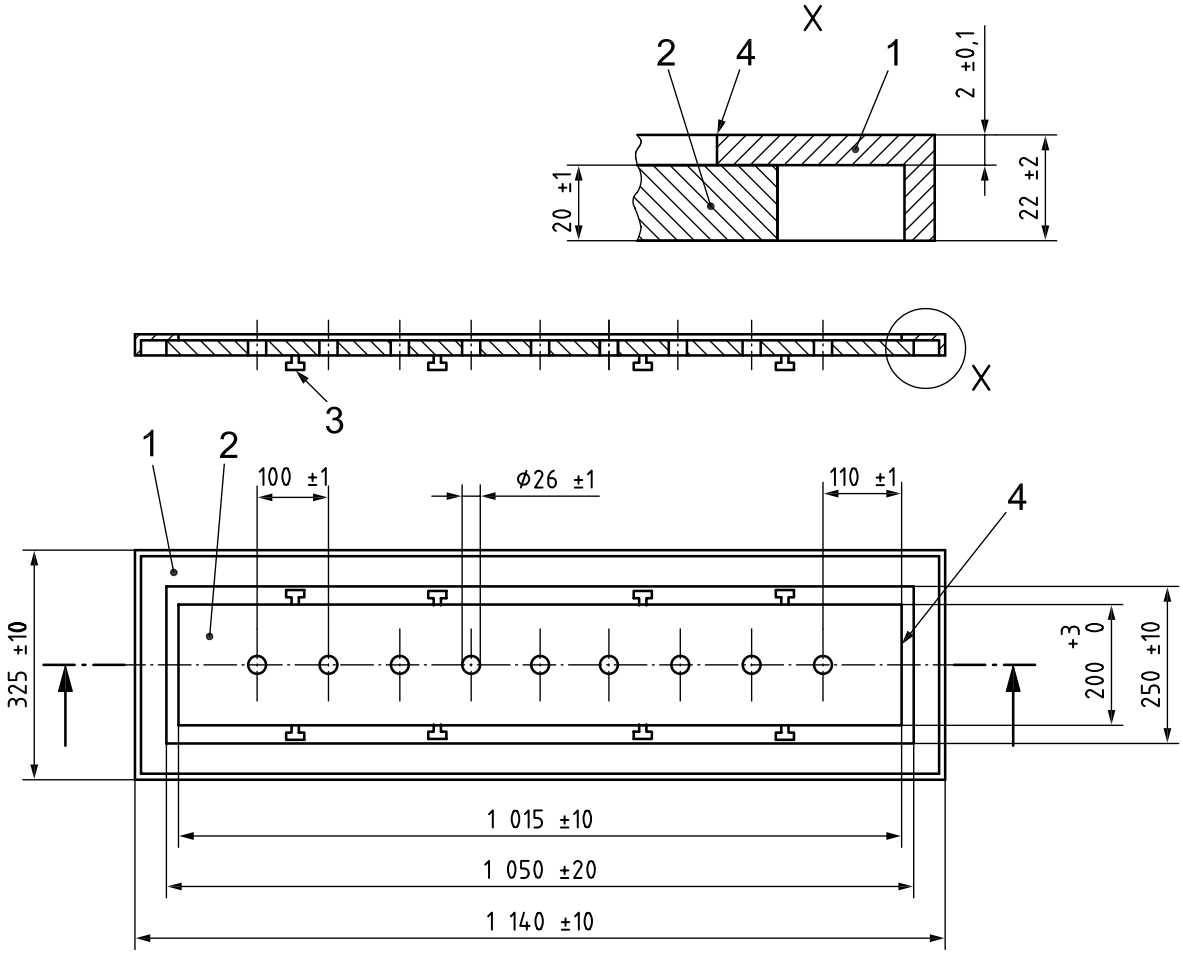

Key

1 specimen holder
2 dummy specimen
3 fixing clamps
4 zero point

Figure 6 — Specimen holder with dummy specimen (not to scale)

© ISO 2010 – All rights reserved

Dimensions in millimetres

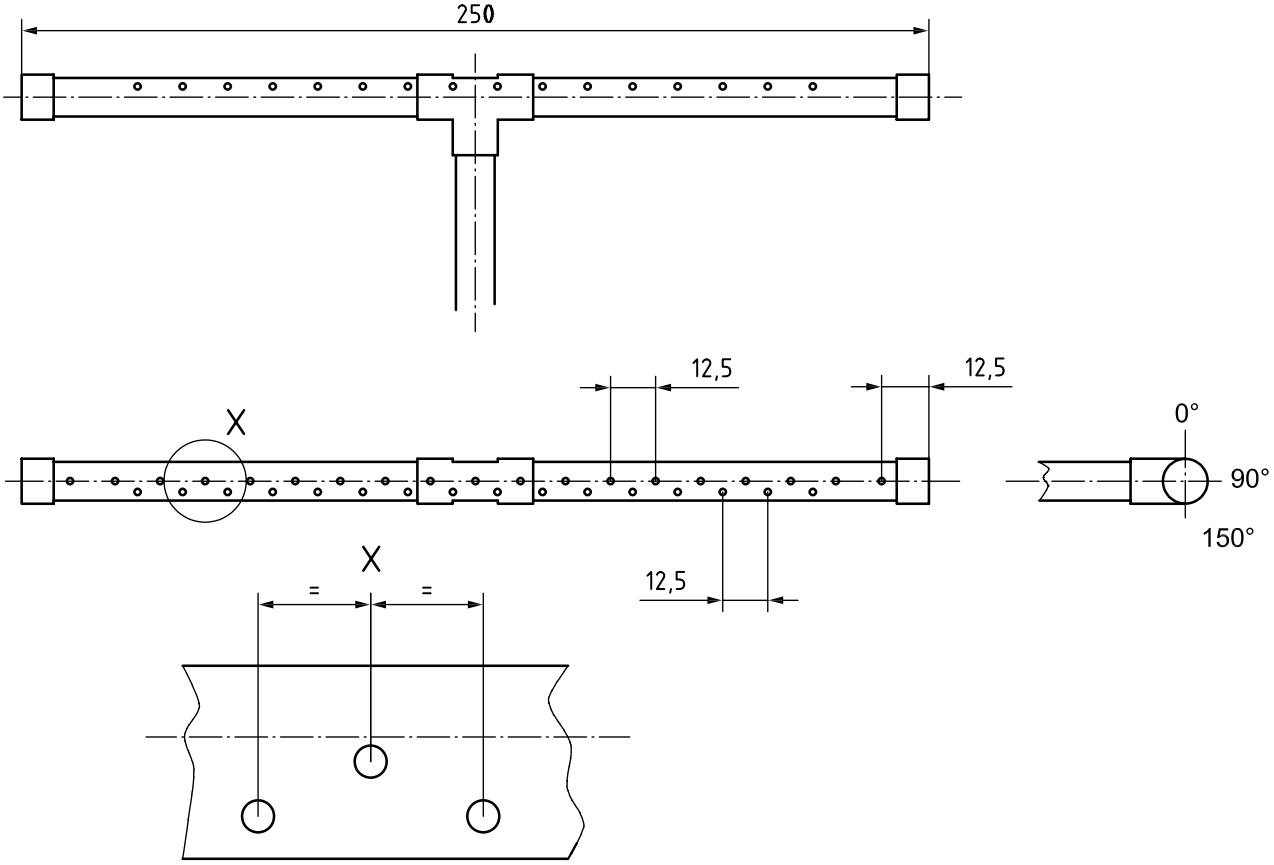

Figure 7 — Pilot burner

© ISO 2010 – All rights reserved

BOUTIQUE AFNOR - Usage réservé à 1 utilisateur (Siret : 75003675800050) NF EN ISO 9239-1:2013-02
NOEL Dominique (dominique.noel@tecsom.com) Pour : AGENCE POUR LA RENOVATION DES SOLS

Dimensions in millimetres

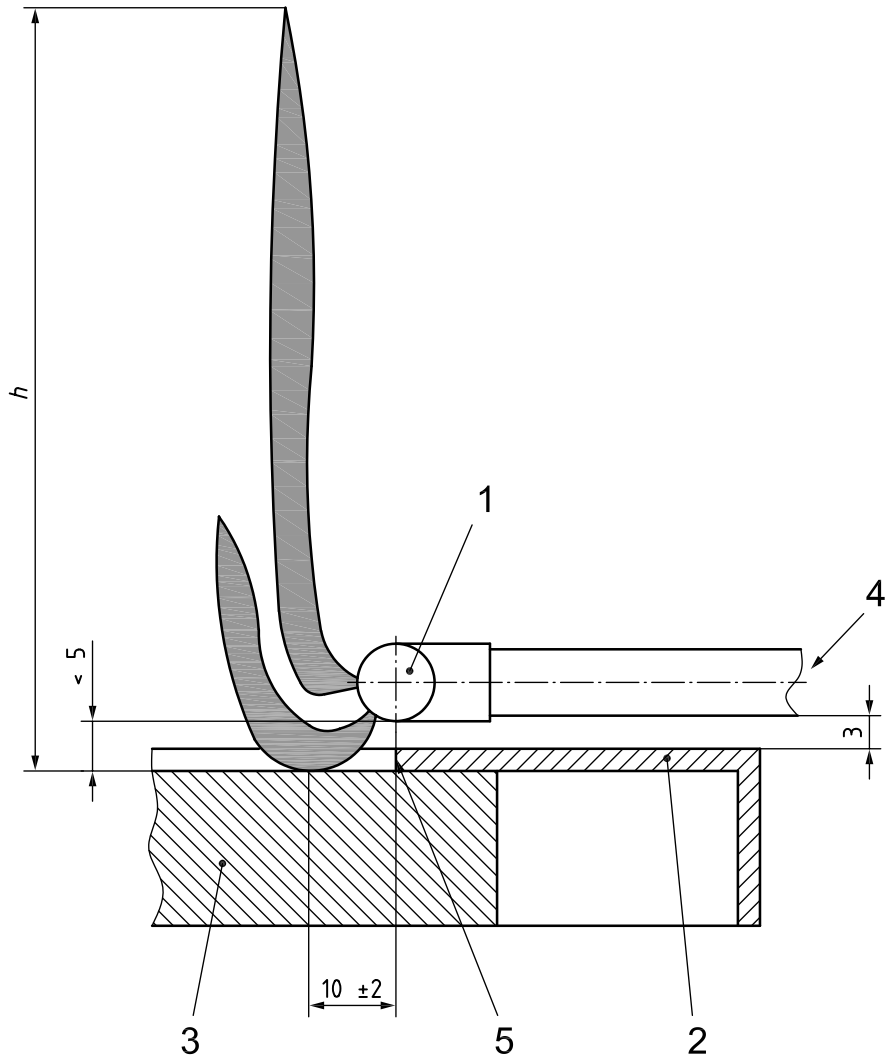

Key

1 pilot burner
2 specimen holder
3 specimen
4 propane
5 zero point
h height of pilot flames: see 5.7, Note 2

Figure 8 — Arrangement of pilot burner above specimen during ignition period

© ISO 2010 – All rights reserved

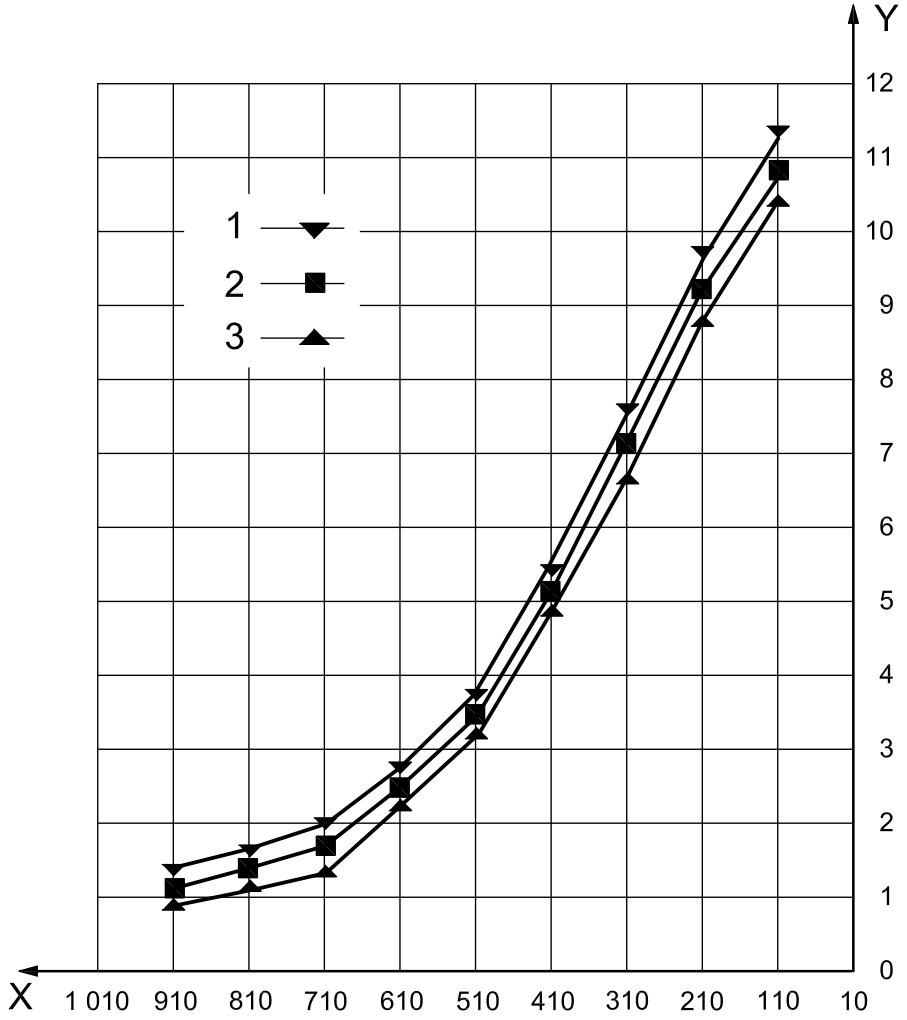

Key

X distance to zero, mm

Y heat flux, kW/m^2

1 upper limit

2 nominal value

3 lower limit

NOTE Table 1 gives the values for the heat flux profile.

Figure 9 — Heat flux profile curve

© ISO 2010 – All rights reserved

BOUTIQUE AFNOR - Usage réservé à 1 utilisateur (Siret : 75003675800050) NF EN ISO 9239-1:2013-02
NOEL Dominique (dominique.noel@tecsom.com) Pour : AGENCE POUR LA RENOVATION DES SOLS

Annex A
(normative)

Smoke measurement

A.1 General

If required, in addition to the requirements stated in this part of ISO 9239, smoke measurement shall be carried out as described in this annex.

A.2 Principle

The optical density of the smoke is determined by measuring the light attenuation with a system consisting of a lamp, lenses, an aperture and a photocell (see Figure A.1).

A.3 Apparatus

A.3.1 Light-attenuation measuring system, comprising the following components and constructed in such a way that soot deposits during the test do not reduce the light transmission by more than 2 %.

A.3.2 Lamp, of the incandescent filament type and operating at a colour temperature of (2 900 ± 100) K. The lamp shall be supplied with stabilized direct current, stable within ±0,5 % (including temperature, short-term and long-term stability).

A.3.3 Lens system, as shown in Figure A.1, which aligns the light to a parallel beam with a diameter, d, of at least 20 mm.

A.3.4 Aperture, placed at the focal point of the lens L_2 shown in Figure A.1. It shall have a diameter, d, chosen with regard to the focal length, f, of the lens L_2 so that d/f is less than 0,04.

A.3.5 Detector, with an output which is over an output range of at least 2 decades, linear within 3 % of the measured transmission value or 1 % of absolute transmission. This shall be calibrated by the use of optical filters. Both noise and drift of the system shall be less than 0,5 % of the start value.

The detector shall have a spectrally distributed responsivity agreeing with the CIE, $V(\lambda)$-function (the CIE photoptic curves) to an accuracy of at least ±5 %.

A.3.6 Recording equipment of the appropriate type to record the output from the light-attenuation measuring system.

A.4 Installation of smoke-measurement system

The light-measuring system shall be mounted to measure the light attenuation in the longitudinal axis in the exhaust stack. The photocell and the lamp shall be mounted on a separate frame outside the exhaust system. The frame shall be connected to the exhaust system only at one point. Steel tubes of internal diameter 50 mm shall be arranged between the exhaust stack of the test chamber and the wall of the exhaust system. These tubes shall have connections for introducing purging air. A flow of 25 l/h of purging air into each of the steel tubes has been found suitable. The arrangement of the light-measuring system is shown in Figures 3 to 5.

NOTE The light-measuring system described in DIN 50055:1989 is suitable.

 © ISO 2010 – All rights reserved

A.5 Light system calibration

A.5.1 General

The light system calibration shall be performed before tests, after set-up, maintenance, repair or replacement of the smoke-measurement system holder or other major components of the exhaust system, and at least every six months. The calibration consists of two parts: an output stability check and an optical filter check.

A.5.2 Stability check

Perform the following steps with the measuring equipment operating. The radiating panel shall not be operating.

a) Set the air flow rate of the exhaust to (2,5 ± 0,2) m^3/s.

b) Start the time measurement and record the signal from the light receiver for a period of 30 min.

c) Determine the drift by use of a least-squares fitting procedure to fit a straight line through the data points. The absolute value of the difference between the reading at 0 min and at 30 min of this linear trend line represents the drift. If the drift or noise is outside the limits given in A.3.5, the test shall not be conducted until the calibration is within specification.

d) Determine the noise by computing the root-mean-square (rms) deviation around the linear trend line.

A.5.3 Optical filters for checking the smoke-measurement system

The light system shall be calibrated with at least five neutral density filters in the optical density range of 0,05 to 2,0 (89 % to 1 % transmission). The neutral density filters used for calibration shall have dispersed attenuant. Coated filters shall not be used. Optical density (OD) is calculated as follows:

$$OD = -\log(I)$$

where I is the transmission expressed as a value in the range 0 to 1.

A.5.4 Optical filter check

The light system shall be calibrated using the following procedure.

Perform the following steps with the measuring equipment operating.

a) Place a light-blocking insert into the filter holder and check the zero.

b) Remove the light-blocking insert and adjust the signal from the light receiver to 100 %.

c) Start the measurement and record the signal from the light receiver for a period of 2 min.

d) Introduce each of the neutral density filters and record the corresponding signal for at least 1 min.

e) Stop the data acquisition and calculate the mean values for each filter.

A.6 Test procedure

Carry out the test, as described in Clause 8, and record the light attenuation in the exhaust duct continuously or at intervals not exceeding 10 s during the test.

© ISO 2010 – All rights reserved

BOUTIQUE AFNOR - Usage réservé à 1 utilisateur (Siret : 75003675800050) NF EN ISO 9239-1:2013-02
NOEL Dominique (dominique.noel@tecsom.com) Pour : AGENCE POUR LA RENOVATION DES SOLS

A.7 Expression of results

Record the maximum light attenuation, the curve of the light attenuation over time and the integrated smoke value calculated as the integral of the smoke obscuration over the testing time and expressed in % × min.

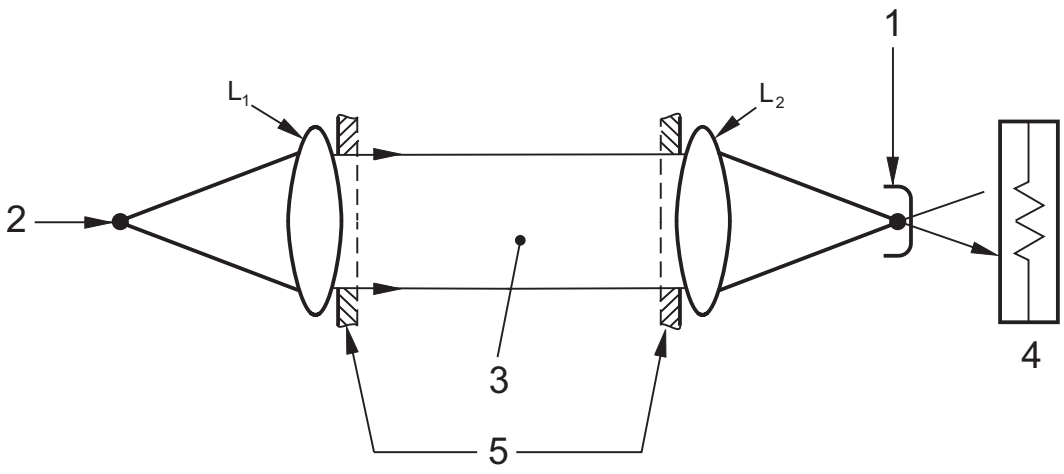

Key

1	aperture
2	lamp
3	smoke particles
4	detector
5	wall of exhaust duct
L_1 and L_2	lenses

Figure A.1 — Optical system

 © ISO 2010 – All rights reserved

BOUTIQUE AFNOR - Usage réservé à 1 utilisateur (Siret : 75003675800050)
NOEL Dominique (dominique.noel@tecsom.com) Pour : AGENCE POUR LA RENOVATION DES SOLS

Annex B
(informative)

Precision of test method

In the course of the development of this part of ISO 9239, a round-robin exercise on 10 floorings was carried out. A total of 13 laboratories participated in the round-robin exercise. The results are given in Table B.1.

Table B.1 — Results from interlaboratory trial

	HF-30 kW/m^2	Repeatability		Reproducibility	
		Standard deviation S_r	S_r/m[a] %	Standard deviation S_R	S_R/m %
Particle board, non-fire retardant	4,4	0,1	3,4	0,6	12,6
Beech parquet	7,8	1,6	19,9	1,9	24,7
PVC, continuous vinyl	10,7	0,2	2,3	0,6	5,6
Rubber	6,4	0,8	13,0	1,5	23,9
Polyamide carpet (textile backing)	3,8	0,4	10,5	0,8	21,3
Polyamide carpet (fire-retardant textile backing)	7,6	1,1	14,8	1,8	23,6
Polyamide carpet (latex backing)	3,7	0,8	20,5	1,0	27,1
Polypropylene carpet	2,7	0,2	6,5	0,4	13,4
Polypropylene carpet (needle-felt)	5,2	1,1	21,4	2,4	47,2
Wool/polyamide carpet (80/20)	7,8	0,8	10,0	1,5	18,9

[a] m is the statistical mean.

© ISO 2010 – All rights reserved

BOUTIQUE AFNOR - Usage réservé à 1 utilisateur (Siret : 75003675800050) NF EN ISO 9239-1:2013-02
NOEL Dominique (dominique.noel@tecsom.com) Pour : AGENCE POUR LA RENOVATION DES SOLS

Annex C
(normative)

Gas and air supplies

The combustion gas and air should be fed to the radiant panel via suitable pressure and flow regulators, safety equipment and flowmeters.

A suitable supply system includes the following:

a) a supply of natural gas, methane or propane of at least 0,1 l/s at a pressure sufficient to overcome the friction losses through the supply lines, regulators, control valve, flowmeters, radiant panel, etc;

b) an air supply of at least 4,5 l/s at a pressure sufficient to overcome the friction losses through the supply lines, regulators, control valve, flowmeters, radiant panel, etc;

c) separate isolation valves for both gas and air supplies;

d) a non-return valve and pressure regulator in the gas supply line;

e) an electrically operated valve to shut off the gas supply automatically in the event of failure of electrical power, failure of air pressure or a fall in temperature at the burner surface;

f) a particle filter and a flow-control valve in the air supply;

g) a flowmeter for natural gas, methane or propane that is suitable for indicating flow of 0,1 l/s to 1,0 l/s at ambient temperature and pressure to a resolution of 1 % or better;

h) a flowmeter for air suitable for indicating flow of 1 l/s to 10 l/s at ambient temperature and pressure to a resolution of 1 % or better.

NOTE The flowmeters are used to assist in setting the air and gas flows to a value which gives a suitable panel temperature, and absolute calibration of the flowmeters is unnecessary.

 © ISO 2010 – All rights reserved

BOUTIQUE AFNOR - Usage réservé à 1 utilisateur (Siret : 75003675800050)
NOEL Dominique (dominique.noel@tecsom.com) Pour : AGENCE POUR LA RENOVATION DES SOLS

Bibliography

[1] DIN 50055:1989, *Light measuring system for testing smoke development*

© ISO 2010 – All rights reserved